Bowden Cable

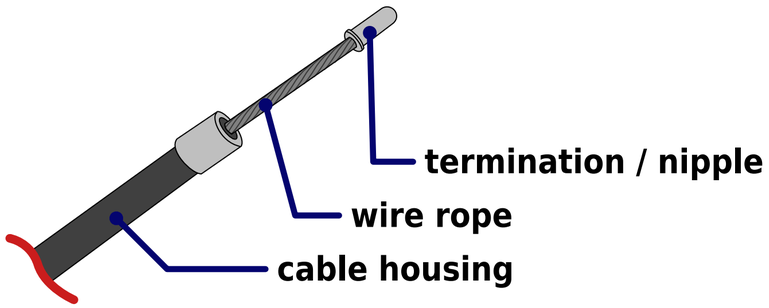

Lighting

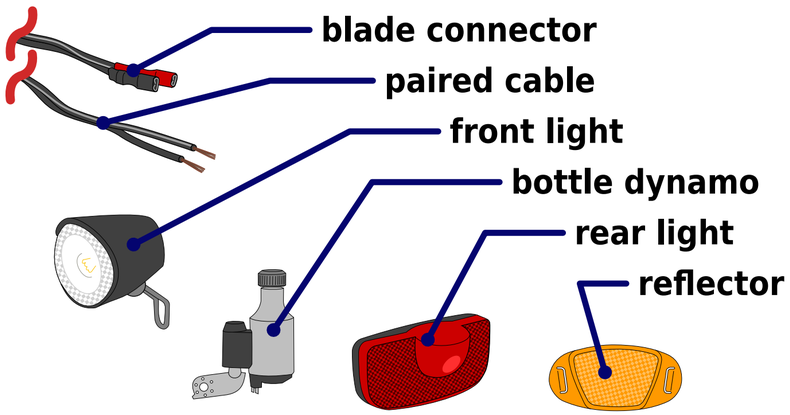

Frame

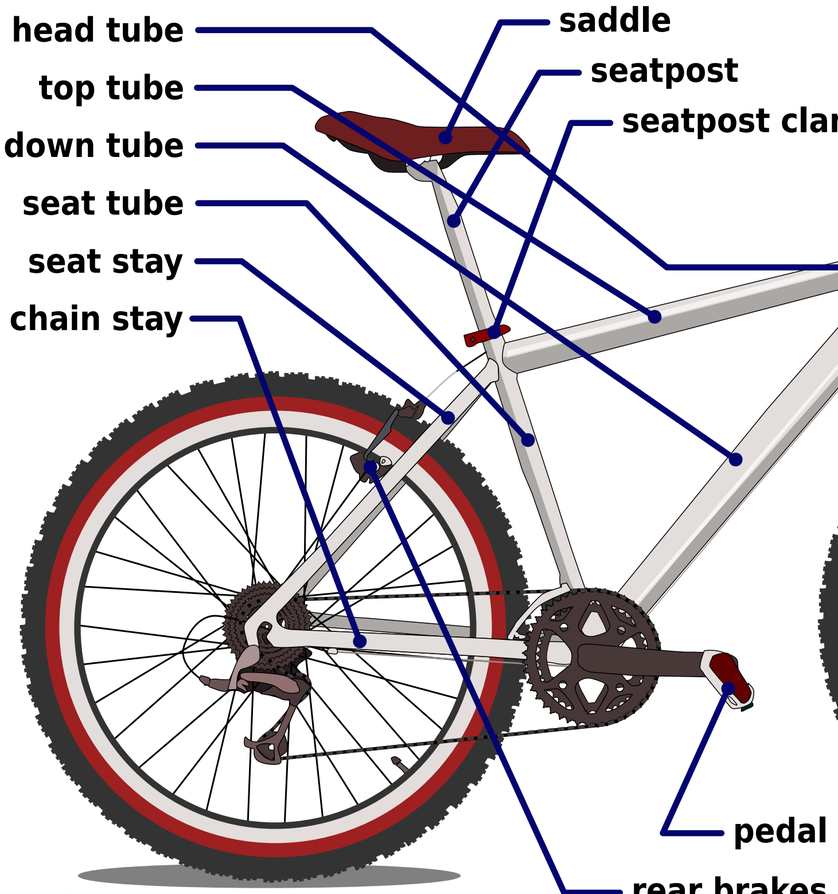

Saddle Area

Front set

Wheel

Drivetrain

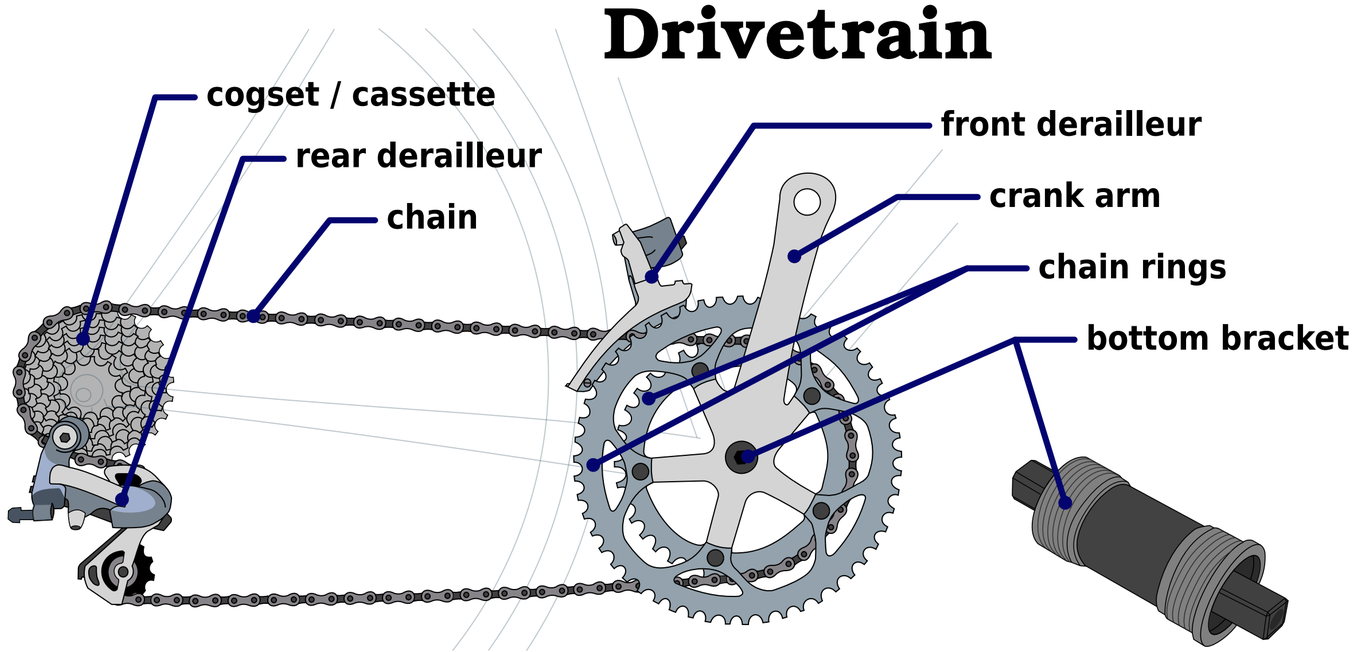

Hub

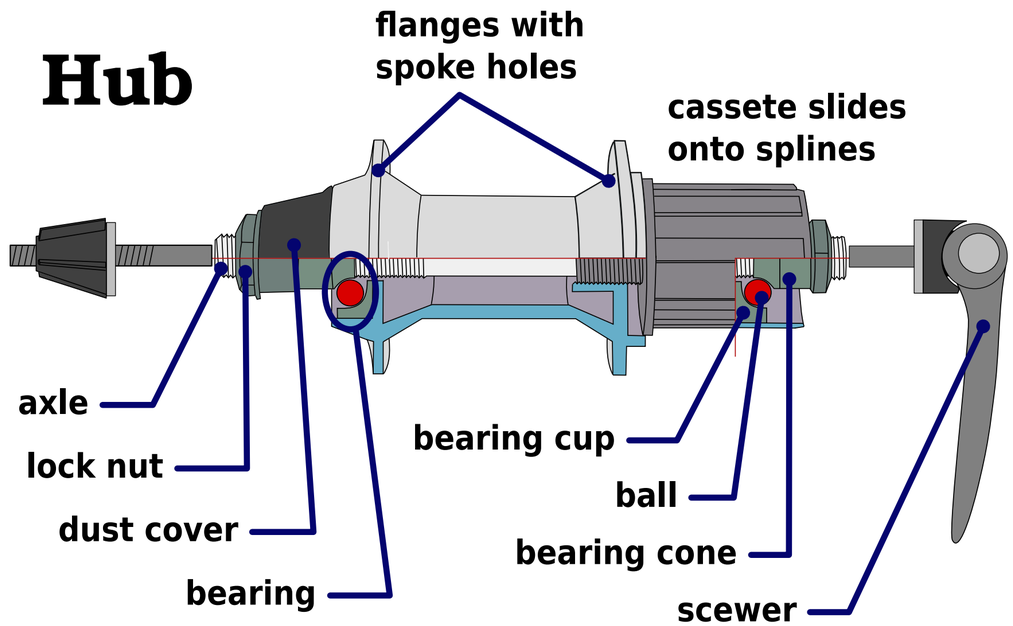

These images have been used to create this wallpaper:
https://commons.wikimedia.org/wiki/File:Bicycle_Hub_Comparison.svg by Al2, used under CC BY-SA 3.0
https://commons.wikimedia.org/wiki/File:Derailleur_Bicycle_Drivetrain.svg by Keithonearth, used under CC BY-SA 3.0
https://commons.wikimedia.org/wiki/File:Bicycle_diagram-en.svg by Keithonearth, used under CC BY-SA 3.0

This work is also licensed under the CC BY-SA 3.0 license, availalbe at
https://creativecommons.org/licenses/by-sa/3.0/

©2023 Ludwig Birkle